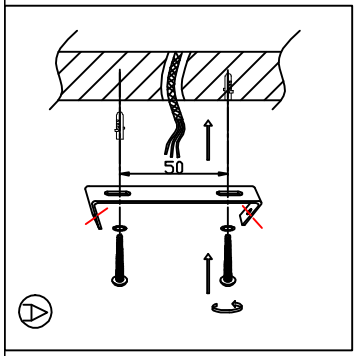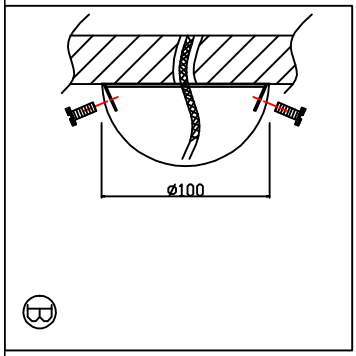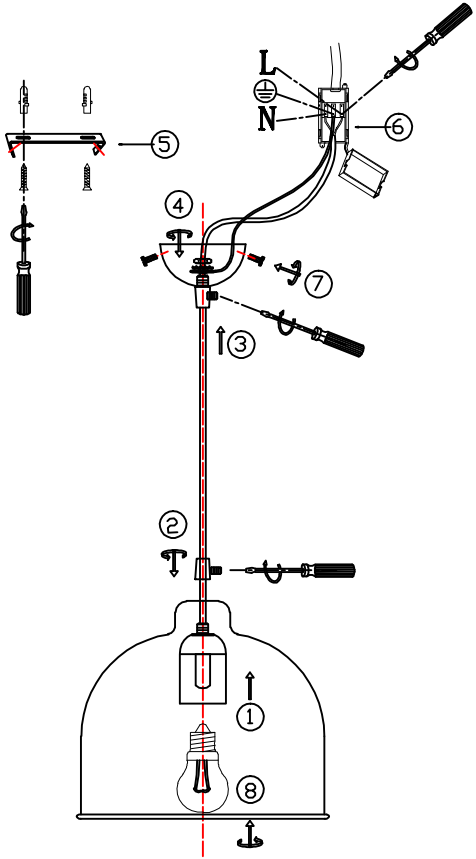INSTALLATION INSTRUCTION ART.3655/1 LumiON collection
(produced under trade mark Odeon Light)